零部件名称:	化油器总成
PARTS NAME:	CARBURETOR ASSY

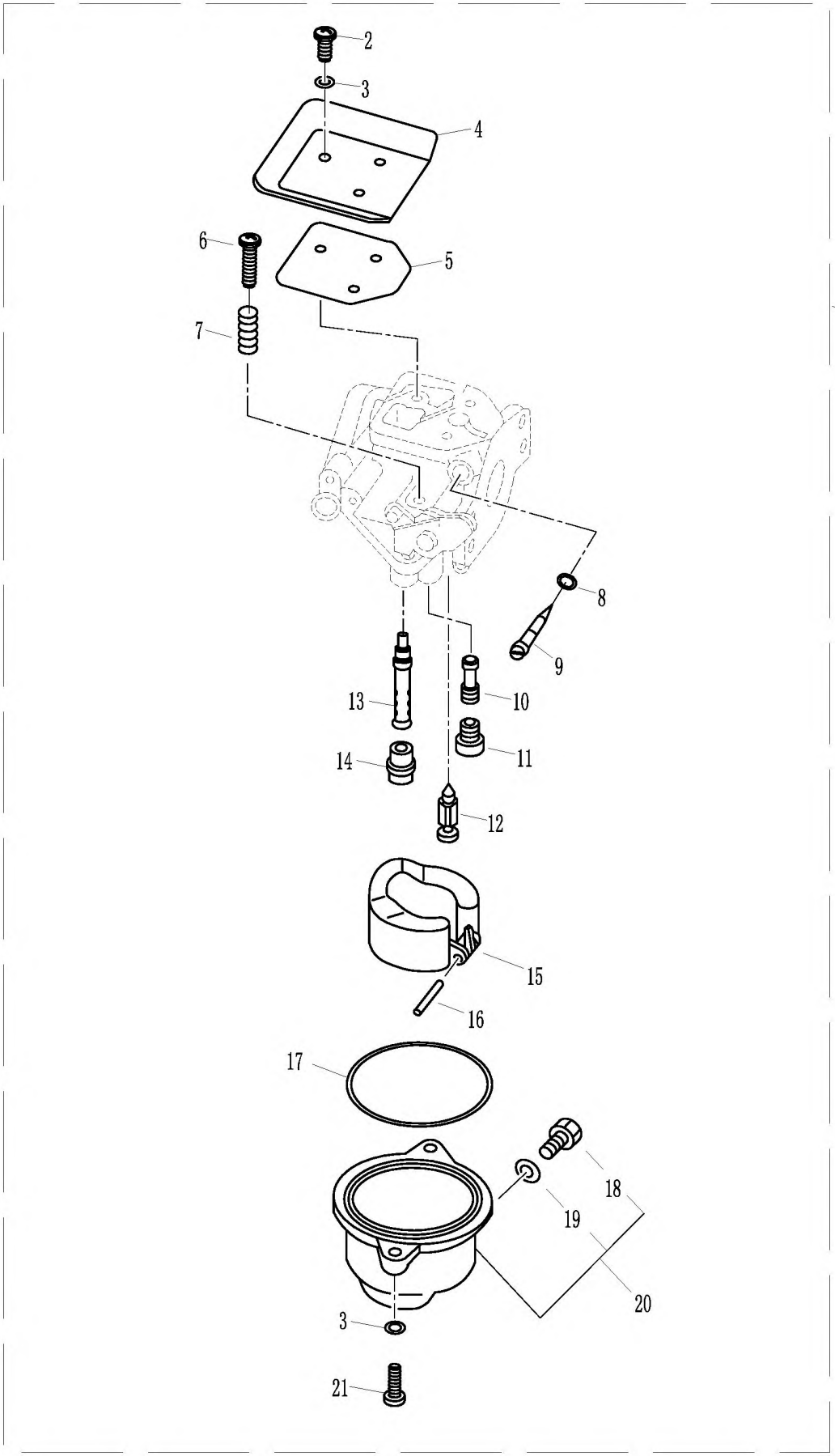

零部件名称: 化油器总成

PARTS NAME: CARBURETOR ASSY

SN. 参照号码	PART NO. 零件编号	DESCRIPTION 零件名称(中文)	DESCRIPTION 零件名称(英文)	QTY 数量					REMARKS 备注
1	F4-04140000	化油器总成	CARBURETOR ASSY	1					
2	GB/T818-M4X10	十字槽盘头螺钉 M4x10	PAN HEAD SCREW M4x10	3					
3	GB/T94.1-4	弹性垫圈4	SPRING WASHER 4	5					
4	F4-04140002	面板	PLATE	1					
5	F4-04140003	衬垫	GASKET	1					
6	F4-04140004	油门调节螺钉	ADJUSTING SCREW, THROTTLE	1					
7	F4-04140005	调节弹簧	ADJUSTING SPRING, THROTTLE	1					
8	F4-04140008	空气调节螺钉O型圈	O-RING, AIR	1					
9	F4-04140009	空气调节螺钉	ADJUSTING SCREW, AIR	1					
10	F4-04140010	空气减速量孔	JET, AIR SLOW	1					
11	F4-04140011	主量孔	MAIN JET	1					
12	F4-04140012	针阀	NEEDLE VALVE	1					
13	F4-04140013	主喷嘴	MAIN NOZZLE	1					
14	F4-04140014	胶帽	RUBBER CAP	1					
15	F4-04140200	浮子	FLOAT	1					
16	F4-04140018	浮子销	PIN, FLOAT	1					
17	F4-04140019	油杯O型圈	O-RING, FLOAT CHAMBER	1					
18	F4-04140301	放油螺塞	FUEL DRAIN BOLT	1					
19	F4-04140302	放油螺塞垫片	GASKET, FUEL DRAIN BOLT	1					
20	F4-04140300	浮子本体组件	BODY, FLOAT CHAMBER	1					
21	GB/T818-M4x12	十字槽盘头螺钉 M4x12	PAN HEAD SCREW M4x12	2					